REVISION			
REV	DATE	DESCRIPTION	DRAWN BY

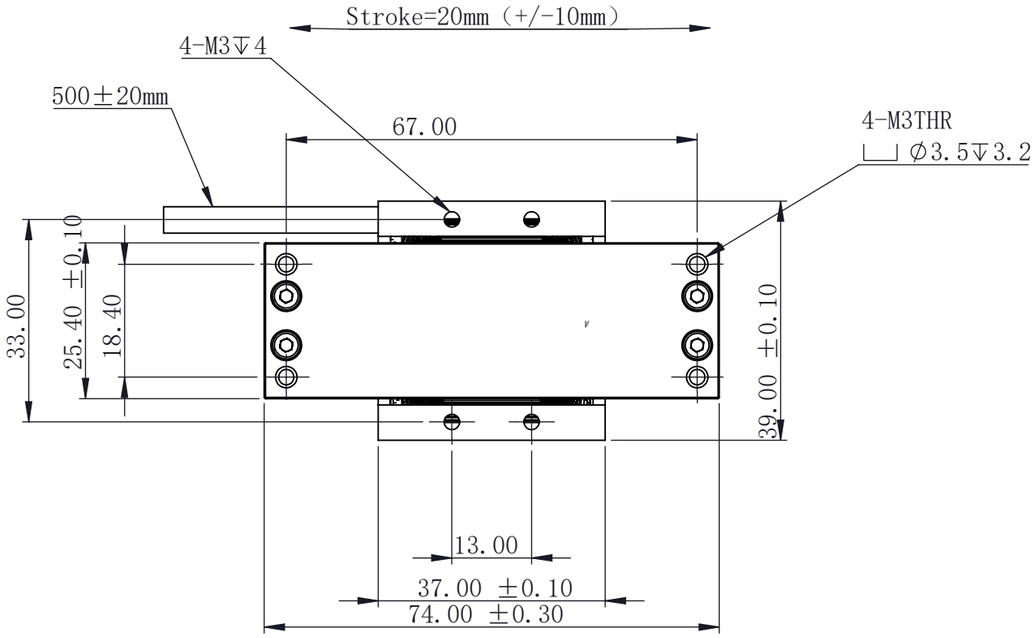

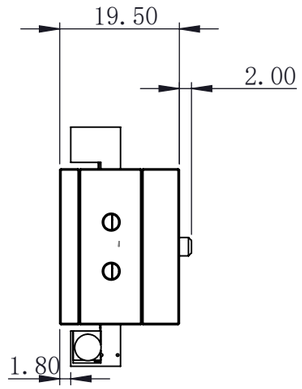

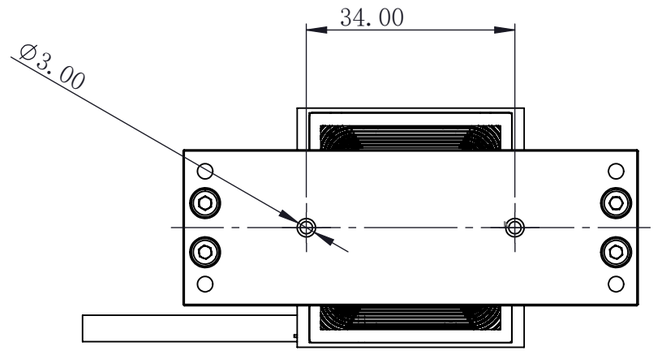

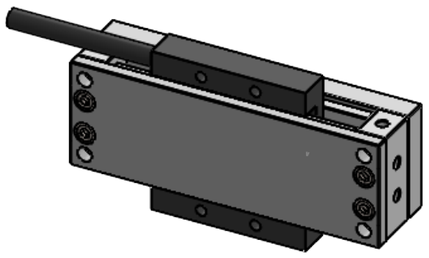

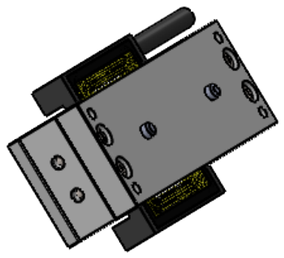

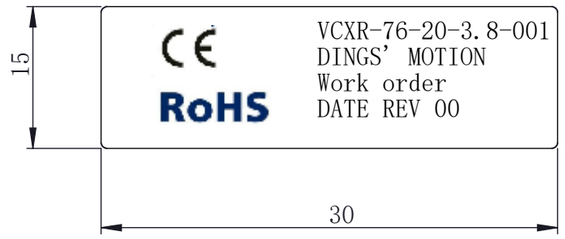

TECHNICAL PARAMETERS

Parameter	Einheit	Werte
Stroke	mm	20
Continuous force	N	3.84
Peak force	N	11.5
Force Constant	N/A	1.92
Back EMF constant	V/m/s	1.92
Motor Constant	N/sqrt (W)	1.62
Resistance	Ω	1.4Ω ±10%
Inductance	mH	0.27±10%
Electrical Time Constant	ms	0.19
Continuous current (coil at 100 ° C)	A	2
Peak Current	A	6
Continious Power Dissipation	W	7.2
Max coil temperature	℃	155
Max. Voltage	Vdc	60
Coil assembly mass	g	22
Magnet weight	g	215
Coil clearance	mm	0.6
Insulation Class		B

CUSTOMER

WIRING CHART

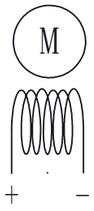

~~~~~~

EXCITING SEQUENCE

UP	→	
Red +	+	−
Black −	−	+
DOWN	←	

NOTICE TO PERSONS RECEIVING THIS DRAWING

THIS DRAWING IS ONLY CONDITIONALLY ISSUED, AND FOR THE SOLE PURPOSE OF INFORMING LICENSEES AND ASSOCIATE CONTRACTORS OF DINGS' MOTION, AND VENDORS THERETO AND CUSTOMERS THEREOF, RECEIPT OR POCESSION THEREOF DOES NOT CONFER TO TRANSFER ANY RIGHT IN THE SUBJECT MATTER OF THE DRAWING. THE DESIGN, CONSTRUCTION, TECHNICAL INFORMATION AND ALL OTHER SUBJECT MATTER SHOWN IN THIS DRAWING ARE AND REMAIN, EXCEPT AS MAY BE OTHERWISE INDICATED BY WRITTEN NOTICE HEREON, THE EXCLUSIVE PROPERTY OF SAID CORPORATION. THIS DRAWING MAY BE REPRODUCED ONLY BY LICENSEES AND ASSOCIATE CONTRACTORS OF SAID CORPORATION AND ONLY FOR LICENSED MANUFACTURE, AND BY VENDORS MANUFACTURING FOR SAID CORPORATION AND ONLY FOR LICENSEES AND ASSOCIATE CONTRACTORS.

UNLESS OTHERWISE SPECIFIED ALL DIMENSIONS ARE IN MILLIMETERS AND TOLERANCES ARE AS BELOW PER ISO2768-cK.

LINEAR		*ANGLUR*	
0~3	±0.2	0~10	±1.5°
3~6	±0.5	10~50	±1°
6~30	±0.8	50~120	±30'
30~120	±1.5	120~400	±15'

DRAWN	QHF	*DATE*	20250923
APPRVD		*DATE*	
MODEL	VCXR-76-20-3.8-001		

DINGS'

SIZE	A3	*SHEET*	1 OF 1
SCALE	Free	*REV*	00
~~~~~~